# Kato MR-350R

City Lifting
CRANE HIRE SPECIALISTS

## 35 t All Terrain Crane

www.citylifting.co.uk

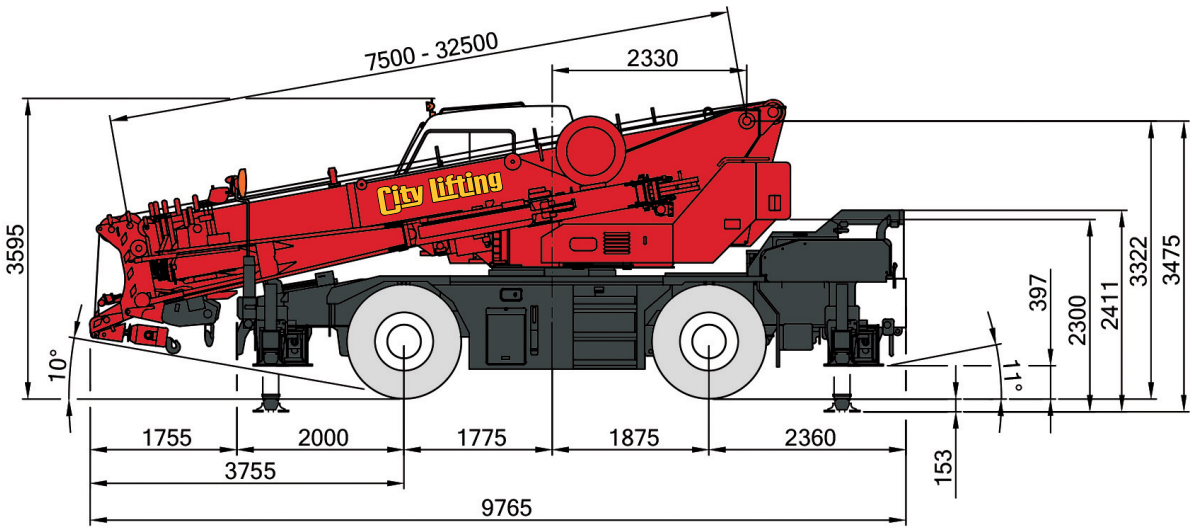


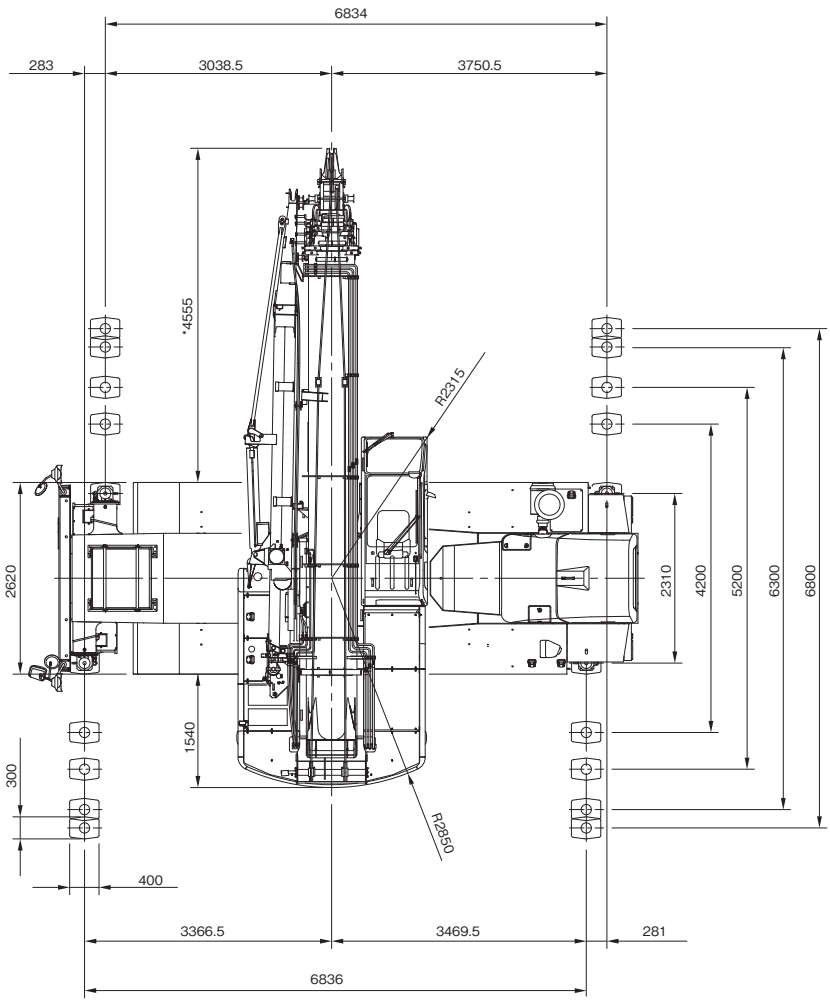


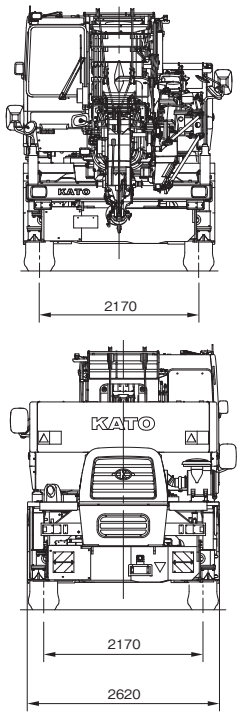


**DISCLAIMER:** Product introduction sheet supplied for reference purposes please see ww.citylifting.co.uk for manufacturer detailed technical specification. Please contact the City Lifting Hire Team for Counter Weight Configurations, Fly Jib Options, Outrigger Loading and Spreader Mat Options.


**Tel:** 01708 805550 | **Fax:** 01708 805558 | **Email:** hire@citylifting.co.uk

9 Juliette Way Purfleet Industrial Park
South Ockendon, Essex RM15 4YD

# Kato MR-350R

City Lifting
CRANE HIRE SPECIALISTS

## Working Range

www.citylifting.co.uk

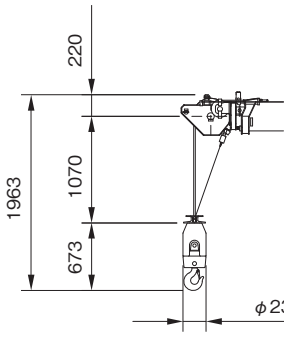


Fly Jib

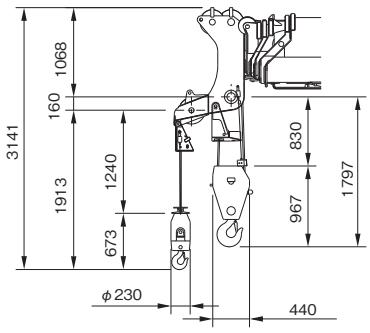


Main Boom

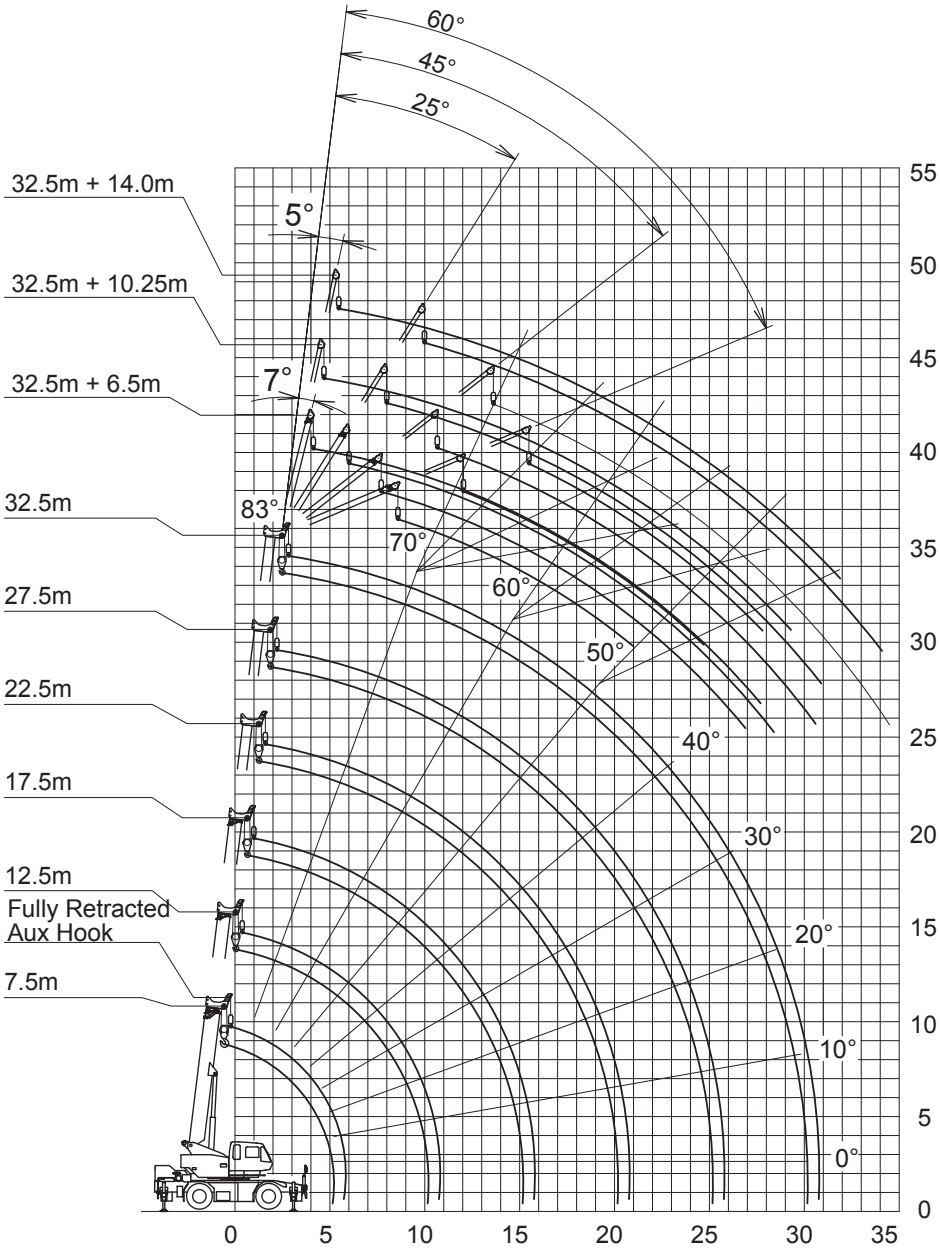


**DISCLAIMER:** Product introduction sheet supplied for reference purposes please see ww.citylifting.co.uk for manufacturer detailed technical specification. Please contact the City Lifting Hire Team for Counter Weight Configurations, Fly Jib Options, Outrigger Loading and Spreader Mat Options.


**Tel:** 01708 805550 | **Fax:** 01708 805558 | **Email:** hire@citylifting.co.uk

9 Juliette Way Purfleet Industrial Park
South Ockendon, Essex RM15 4YD